NetterVibration

Operating instructions for Sequence Control Systems Type NASmini 16

March 2024
No. 2172E

These operating instructions apply to: **NASmini 16 AC 230 V**
NASmini 16 DC 24 V



Serving industry with vibration

Netter GmbH
Fritz-Lenges-Str. 3
55252 Mainz-Kastel

Contents

1	**General information**	**3**
2	**Safety**	**5**
3	**Technical data**	**7**
4	**Design and function**	**10**
5	**Transport and storage**	**14**
6	**Installation**	**15**
7	**Start-up and operation**	**18**
8	**Maintenance and servicing**	**25**
9	**Troubleshooting**	**26**
10	**Disposal**	**28**
11	**Annex**	**29**

Scope of delivery

Please refer to the delivery note for the scope of delivery.

Check the packaging for possible transport damage. In the event of damage to the packaging, check the contents for completeness and possible damage. Inform the carrier in the case of damage.

Designation

The Sequence Control Systems NASmini 16 are hereafter referred to as "NAS".

Version of document

Document no.	2172E
Version no.	1
Date of issue	March 2024

1 General information

Use and storage

Before installing the NAS read these instructions carefully. It is the basis for any action when dealing with the NAS, and may be used for training purposes. The instructions should be subsequently stored at the operation site.

Target group

The target group for these instructions is technical staff, who have basic knowledge in electrics and mechanics.

Only complying technical staff may work on the NAS.

The NAS may only be installed, put into operation, maintained, troubleshot and disassembled by persons authorised by the operator.

Copyright

This documentation is protected by copyright.

Netter*Vibration* reserves all rights such as translations, reprinting and reproduction of the instructions, as well as parts thereof.

Limitation of liability

All technical information, data and instructions for installation, operation and maintenance in these instructions are based on the latest information available at the time of printing and take our past experience to the best of our knowledge into account.

No claims can be derived from the information, illustrations and descriptions in these operating instructions.

The manufacturer does not assume liability for damages resulting from:

- failure to observe the instructions,
- improper use,
- unauthorised repairs,
- technical modifications,
- use of non-permissible spare parts.

Translations are made to the best of our knowledge.

Netter*Vibration* does not assume liability for translation errors, even if the translation was made by us or on our behalf. Only the original German text remains binding.

Directives / standards observed

The Sequence Control Systems NASmini 16 are build according to the following directives:

- 2014/35/EU - low voltage directive
- S.I. 2016:1101 - Electrical Equipment (Safety) Regulations 2016 (UK)
- 2014/30/EU - electromagnetic compatibility directive
- S.I. 2016:1091 - Electromagnetic Compatibility Regulations 2016 (UK)

The main standards observed are indicated in the CE declaration of conformity.

The rules and regulations of the local associations for electrical engineering apply (e. g. IEC, VDE, OEVE, SEV, etc.).

Instruction and warning symbols

The following instruction and warning symbols are used in these instructions:

Personal injuries

⚠ DANGER	
	indicates an immediate danger. Disregard of this notice will result in death or severe personal injuries.

⚠ WARNING	
	indicates a potential danger. Disregard of this notice can result in death or severe personal injuries.

⚠ CAUTION	
	indicates a potentially dangerous situation. Disregard of this notice can result in minor or moderate personal injuries.

Material damages

NOTICE
indicates potential material damage. Disregard of this notice can result in material damage.

Notes

IMPORTANT
indicates actions, methods or notes that are not relative to safety, e.g. useful information and tips.

	**Environmentally safe disposal** indicates the obligation of environmentally safe disposal.

2 Safety

Intended use

The NAS are controllers intended for the clocked actuation of vibrators. The NAS enable the switching on and off of electric vibrators, pneumatic vibrators, pneumatic impactors and other drives with second precision. They are controlled via solenoid valves or power contactors.

Any other use is considered improper.

Qualification of qualified personnel

Installation, commissioning, maintenance and troubleshooting of the NAS may only be performed by authorised qualified personnel, who have basic knowledge in electrics and mechanics.

All handling of the NAS is the responsibility of the operator.

High voltage

⚠ DANGER

Risk of electric shock due to high voltage

Live parts can cause severe injuries or even death.

- ➢ Installation, connection, commissioning, maintenance and disassembly of the NAS may only be carried out by authorized qualified personnel.
- ➢ The housing of the NAS must not be opened when live.
- ➢ Installation, connection, maintenance and disassembly may only be carried out in a voltage-free state.
- ➢ When handling the NAS the provisions and regulations of the local electrical engineering associations (e.g. VDE) and the accident prevention regulations must be observed.
- ➢ Perform all work only with insulated tools suitable for the application.

Safety rules

⚠ DANGER



Electric shock

An electric shock will result in serious injury or even death. The NAS must be free of voltage during assembly, start-up, maintenance and troubleshooting.

Observe the following five safety rules:

1. Disconnect the NAS from the mains supply.
2. Secure the NAS against re-activation.
3. Establish that the NAS has no voltage.
4. Earth and short-circuit the power supply of the NAS.
5. Cover adjacent live parts or fence them off.

Electric shock

⚠ DANGER



Danger of electric shock due to incorrect or wrongly laid electrical cables

Incorrect or improperly laid electrical wiring can cause electric shock and result in serious injury or even death.

- ➢ Lay electrical cables carefully. Make sure that electrical cables are not worn through vibrating parts or sharp edges.
- ➢ Protect the electrical lines from high temperatures and lubricants.
- ➢ Only use suitable, flexible feed cables to connect the NAS. The conductors in the supply cable must be temperature-resistant and have a sufficiently large cross-section matched to the cable length.
- ➢ Check the perfect condition of the electric cables and plugs regularly. Detected errors must be eliminated immediately.

Automatic start-up

⚠ WARNING

Risk of injury due to automatic start-up

If the mains connection is supplied with voltage again after a voltage interruption, the next cycle always starts with the set working time. The output of the NAS is immediately energized. Automatically starting vibrators and drives can lead to serious personal injury.

- ➢ Check that the vibrators or drives can start up without danger before applying voltage to the mains connection.

3 Technical data

Operating conditions and technical data

NASmini 16 AC

Parameter	Values
Supply voltage	100 V to 240 V AC, 50 Hz to 60 Hz
Switching voltage	24 V DC
Power consumption	30 VA

NASmini 16 DC

Parameter	Values
Supply voltage	24 V DC ± 10%
Switching voltage	24 V DC
Power consumption	max. 30 W

Versions:
Basic device as master control with max. 16 valve outputs.
Extension unit as slave control, a total of 64 valves can be controlled.

NASmini 16 AC und DC

Parameter	Values
Output terminals	24 V DC, max. 1 A 16 valves per NAS, 64 valves per unit
Switching current	max. 1 A with a duty time ≤ 1 s and a pause time ≥ the pulse time The connections are short-circuit-proof.
Output power	min. 0,5 W / max. 24 W
Fuse	Glass fuse, 2A slow-blow
Valve outlets	1 to 16
Cable glands	3 x cable gland M32 x 1,5, metric 3 x cable gland M16 x 1,5, metric Multiple sealing inserts and locking bolts
Electrical connections	Supply: Cross-section rigid max. 4,0 mm² Cross section flexible max. 2,5 mm² without wire end ferrules

Parameter	Values
Relay output	1 changeover contact 250 V AC, 5 A as a combined operating and fault signal
Duty time (PULSE)	1...99 seconds adjustable
Pause time (PAUSE)	1...99 seconds adjustable
Idle time	0...999 minutes adjustable
Permissible ambient temperature	-20°C to +50°C
Permissible humidity	max. 95 %, no condensation permitted
Protection class	IP 65 Protection class IP 65 can only be achieved if the supplied cable glands and sealing inserts are installed correctly and the correct cable cross-sections are used..

The technical data of your NAS can be found on the type plate.

Type plate

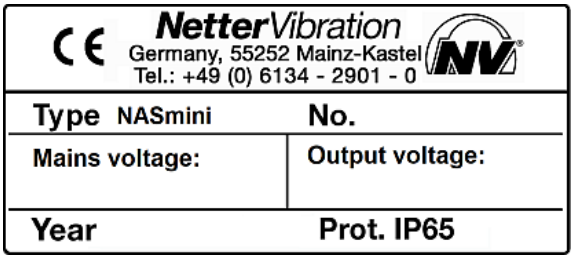

Dimensions

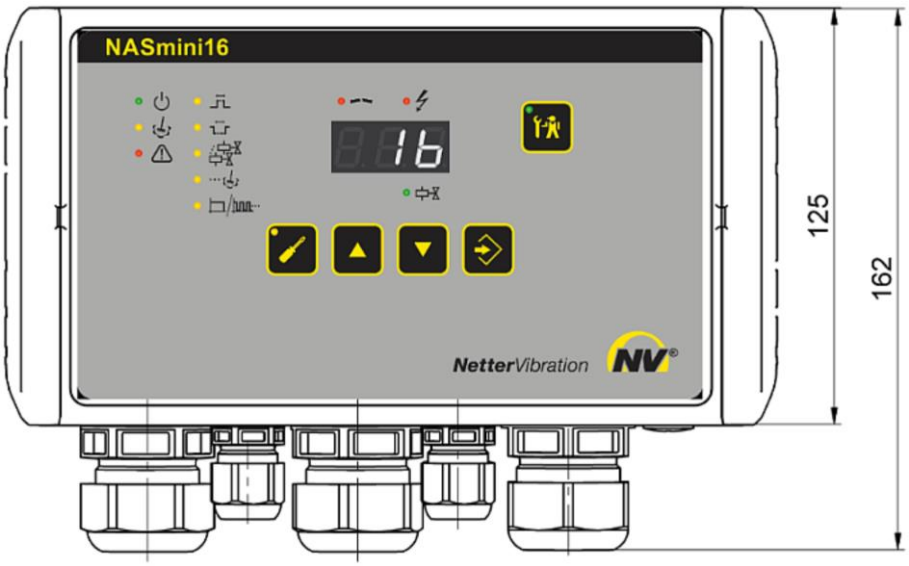

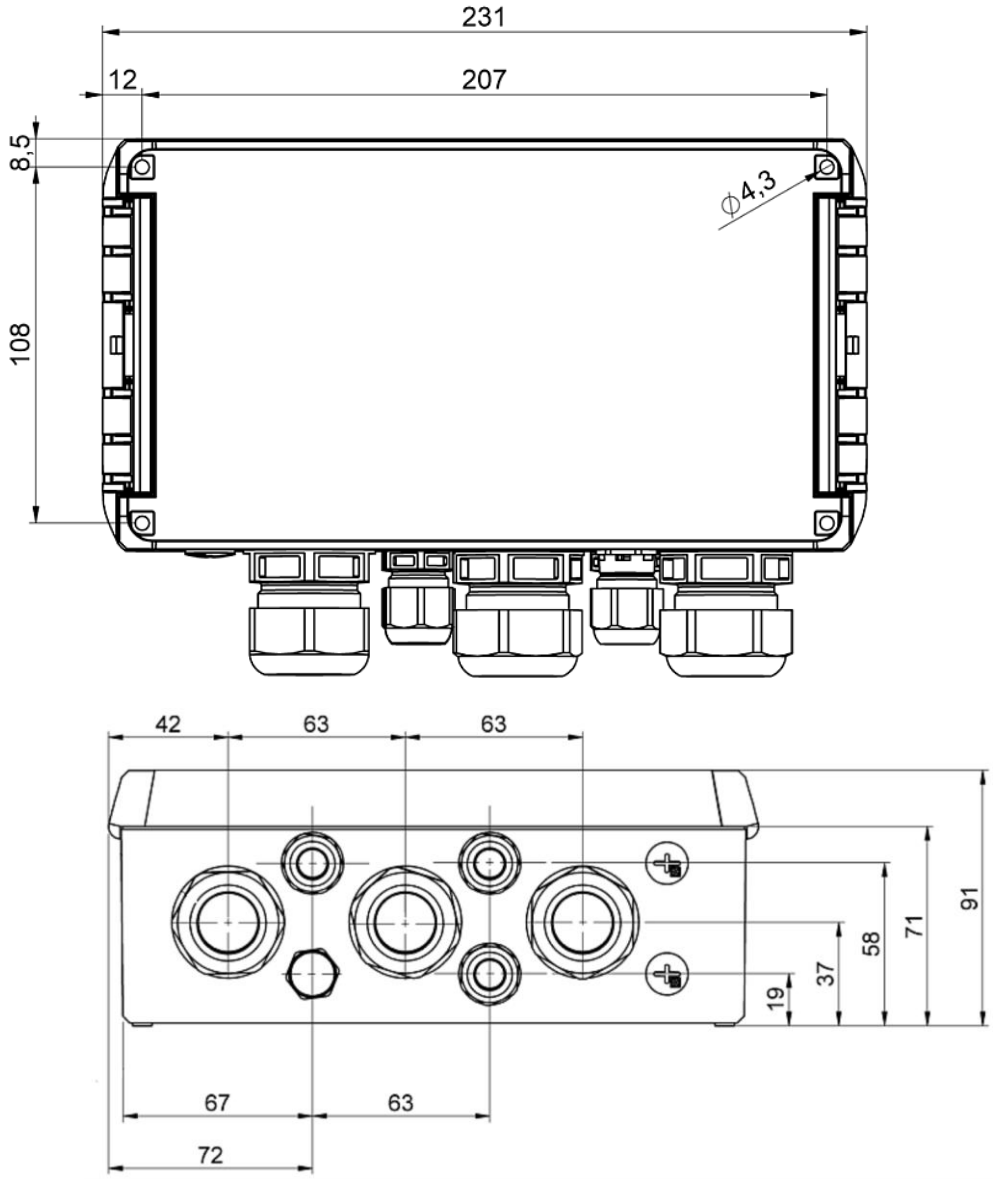
231
12
207
8,5
108
⌀4,3
42
63
63
91
71
58
37
19
67
63
72

4 Design and function

Design



No.	Element	Function
1	Housing	Contains and protects the internal components.
2	Display and control elements	Setting and reading parameters of the NAS.
3	Cable glands	Feed connection cables.
4	Terminal block in the housing	Connect the NAS electrically. Detailed description in separate section, see chapter Installation.
5	Hinge lock	For opening the housing cover.

Display and control elements

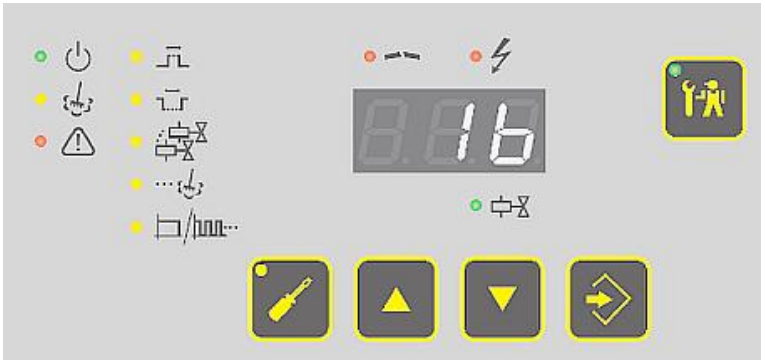

Symbol	Meaning
	Operating signal
	Permanent activation
	Alarms active
	Duty time
	Pause time
	Number of valves
	Number of sequences (cycles)
	Idle time [min.] (LED illuminates during idle time)
	Interruption due to defect valve line or solenoid valves
	Short-circuit of a valve line (excess current)
	Displays the number of the active valve
	Display: • Normal operation: current valve • Parameter setting mode: Parameter values and alarm information

Keys	Meaning
	PARA-key: Parameter setting mode ON/OFF
	UP-key: increase displayed values
	DOWN-key: decrease displayed values
	ENTER-key: accept displayed values
	TEST-key: test mode ON/OFF

Terminal strip

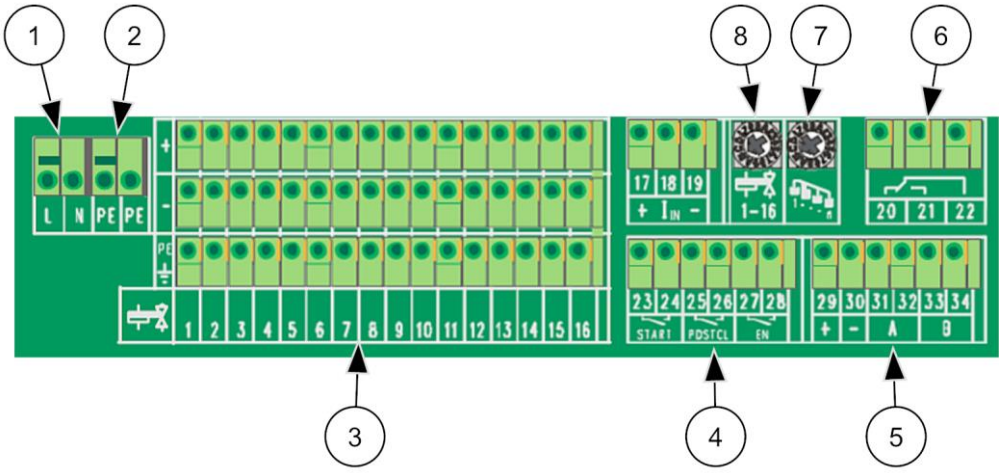

No.	Connection	Description
1	L (+)	Supply voltage L, 100-240 V AC or (+) 24 V DC
	N (-)	Supply voltage N, 100-240 V AC or (-) 24 V DC
2	PE	Potential earth
3	1 to 16	Output 1-16 (+24V DC)
4	START	Input START, potential-free.
	POSTCL	Start sequence, potential-free.
	EN	Enable/vibration monitoring, potential-free.
5	+ / -	Supply voltage extension unit
	A / B	Communication extension unit
6	20	Operating message relay
	21	Fault message relay
	22	Power supply relay
7	Coding switch	Device order / communication address
8	Coding switch	Number of solenoid valves

Function

The NAS are suitable for the cycled actuation of up to 16 pneumatic or electric vibrators. The sequence begins with the duty time (PULSE), which can be set to between 1 s and 99 s. During this time, 24V DC is applied to the connected output.
When the duty time elapses, the pause time (PAUSE) runs for 1 s to 999 s. This cycle then moves to the next output. Once all connected outputs have been processed once (duty time and pause time), a repetition of the processes or the idle time (0 to 999 min) begins, depending on the operating mode.

5 Transport and storage

Transport conditions

Special conditions of transport are not required.

Packaging

The NAS are packed ready for installation.

The packaging protects the NAS from transport damage. The packaging material has been selected from an environmentally safe and technically disposable point of view and is therefore recyclable.

The return of packaging to the material cycle conserves raw materials and reduces the amount of waste.

Storage

- Store the NAS in a dry and clean environment.
- The permissible storage temperature is between -20 °C and +50 °C.
- The permissible relative humidity is max. 60 %.
- Do not store the NAS outdoors. The electrical components are not protected against corrosion.

6 Installation

Observe the safety instructions in chap. Safety, starting on page 5.

Mount and connect NAS



1. Open the hinge lock using a slotted screwdriver.
   Make sure you move the screwdriver to the right to lever open the hinge. If the screwdriver is moved to the left, the housing cover may be damaged.
2. Flip the housing cover upwards.
3. Screw the NAS onto a clean and flat mounting surface (± 0.1 mm flatness) using suitable screws via the mounting holes.
   The NAS can be mounted in any position.
4. Feed the connection cables through the respective cable gland.
5. Connect the NAS via the terminals on the terminal strip, see chapter "Design and function", section "Terminal strip".
6. Observe the connection specifications in the following sections.

Supply voltage

The supply voltage is applied centrally to the base unit. The values can be found on the type plate.
Make sure that the PE conductor is connected.

Valve connections

A maximum of 16 solenoid valves can be connected to the control unit. The connections are arranged vertically one above the other. Each valve connection has its own PE terminal.
Note: All valve outputs of a system refer to the same earth (-). It is permitted to use one earth line for several valves.

The valve outputs are designed for 24 V DC and 1 A. All valve outputs are short-circuit proof and are monitored for function. In the event of a cable break (excessive resistance) or overcurrent 1.5 A (also short circuit), an error is displayed on the control unit (see chapter "Troubleshooting", on page 26).
The test function can be used to test the function of individual solenoid valves.

Extension units (optional)

Extension units (E) draw their supply voltage from the base unit (B) via terminals 29, 30 with 24 V DC.
For existing extension modules, the PE conductor must be connected separately for each extension unit.

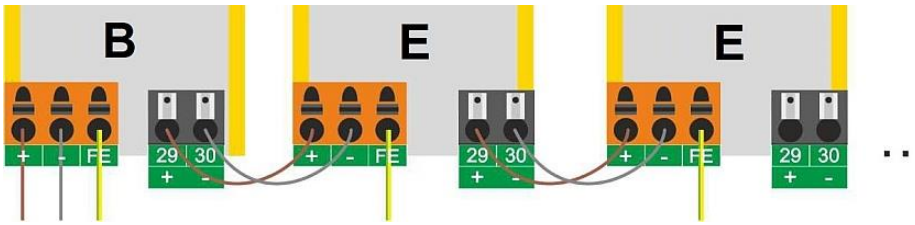

Communication

Serial communication is made possible by connecting ports A and B from device to device.
NOTICE: Lines A and B must not be interchanged.

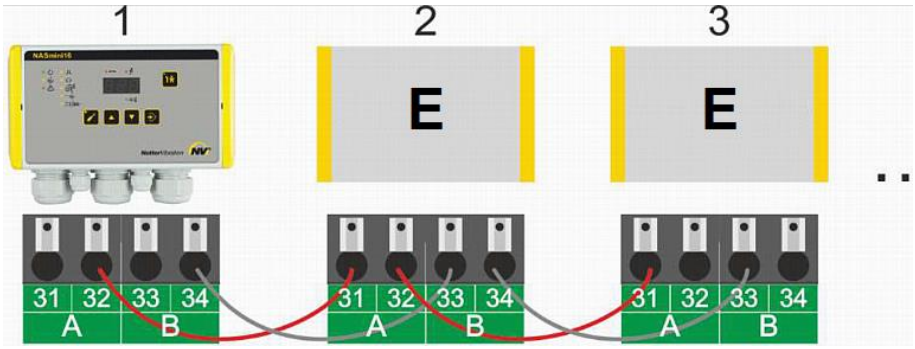

The coding switch specifies the logical position in the sequence of the controls, which does not have to correspond to the wiring sequence. The coding switch settings are described in the section "Setting the coding switch", on page 18 described.

Bus structure

NOTICE: Star-shaped wiring of the serial connection or branches are not permitted.

Connection options with optional extension units (E):

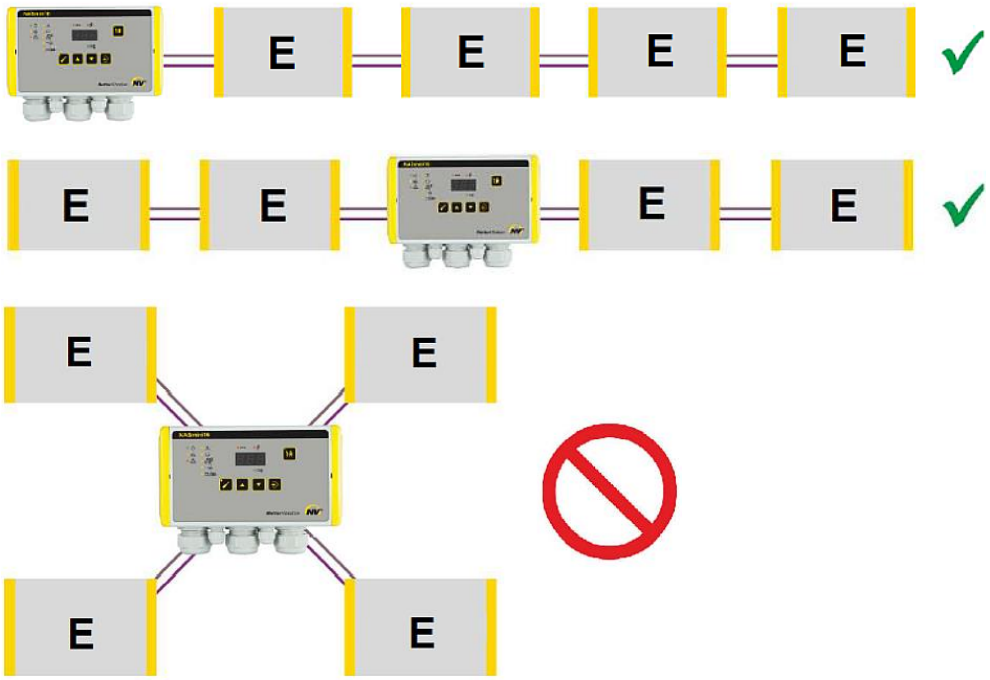

7 Start-up and operation

Observe the safety instructions in chap. Safety, starting on page 5.

Permissible operating conditions

Please refer to chap. Technical data, page 7 for permissible operating conditions.

Regulations

Installation work as well as operation of the system are to be carried out taking the valid accident prevention regulations into account.

The operator is responsible for the proper condition of the system.

Measures

Carry out the following measures before start-up:

1. Check the mains voltage and the grid feed-in.
2. Check that the system is in perfect electrical condition.
3. Check that all protective measures on the system have been observed.
4. Check that the cables are undamaged and laid according to the known regulations and standards.
5. Eliminate possible errors.

Setting the coding switch

Coding switch for the device order

	The coding switch indicates the logical position in the order of the controls, regardless of the wiring order. Device number 5 applies to an operating and control device without an effective valve connection. The valves are connected from control unit 1. The digits 6 to 9 and A to F have no function.

Coding switch for the solenoid valves

	A maximum of 16 solenoid valves can be connected to each control unit. The coding switch is used to set the number of valves connected to the control unit from 1 to 16. Valve 10 to 15 = A to F Valve 16 = 0 If the control unit is operated without an extension module, the number of valves can remain set to 16. The setting defined in the "Number of valves" menu then applies.

Example 1: 20 valves
1 basic unit is "Master" with 16 valves
1 extension module is "slave" with 4 valves

Master:	**Slave:**
Coding switch for the solenoid valves = 0 Coding switch for the device order = 1	Coding switch for the solenoid valves = 4 Coding switch for the device order = 2
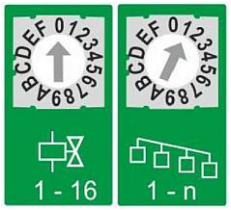	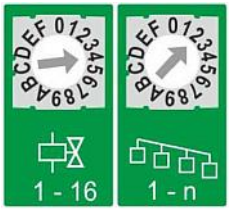

Example 2: 20 valves
1 basic unit is "Master" with 10 valves
1 extension module is "slave" with 10 valves

Master:	**Slave:**
Coding switch for the solenoid valves = A Coding switch for the device order = 1	Coding switch for the solenoid valves = A Coding switch for the device order = 2
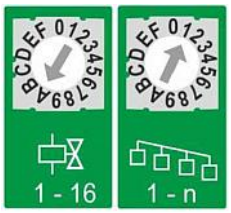	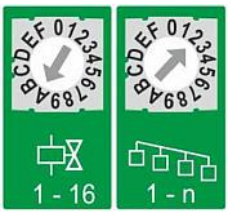

Parameter overview

Parameter	Display element	Setting range	Factory setting
Duty time		1 s - 99 s	1 s
Pause time		1 s - 999 s	1 s
Number of valves		1 - 64	16
Number of sequences (cycles)	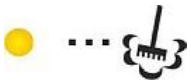	OFF, 0 - 9	1
Idle time		0 - 999 min	0

Adjusting the duty time

1.		Press the PARA key to start the parameterization mode and change the values of the system parameters. A flashing LED indicates the current value to be changed.
2.	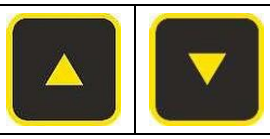	Use the UP/DOWN keys to select the desired parameter. The current value is shown on the display.
3.		Press the ENTER key to change the displayed value. The first digit of the value flashes in the display.
4.	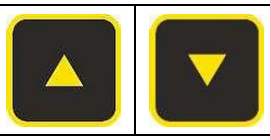	Change the corresponding digit with the UP/DOWN keys.
5.		Press the ENTER key to accept the changed value. The next digit of the value then flashes on the display.
6.		Repeat steps 4 to 5 until the lowest digit of the value is changed. The next parameter is offered.
7.		If necessary, change the value of the next parameter.
8.		Press the PARA key to exit parameterization mode.

Set vibration monitoring

Vibration monitoring can be set when using the optional ***Vibro****Monitor* series vibration monitoring system.

1.		Press the TEST and UP keys simultaneously to activate vibration monitoring. "b" is shown on the display.
2.		Press the TEST and DOWN keys simultaneously to deactivate vibration monitoring.

Set parameter protection

1.			When switching on the NAS press the UP and DOWN keys simultaneously for 5 seconds. "cod" is shown on the display.
2.			Confirm the display with the ENTER key.
3.			Use the UP/DOWN keys to set a code for parameter protection. The code must be entered before changing a parameter. Further parameter changes are possible until the parameterization mode is quit. If the current code is to be read out, the UP and DOWN keys must be pressed again when the device is switched on. If the code is set to "0", parameter protection is deactivated.

Reset factory settings

Note:
If a password has been assigned, this must be entered during the reset. After the reset, the password "0" is reassigned.

1.			When switching on the NAS press the PARA and ENTER keys simultaneously for 5 seconds. "EEP" appears on the display.

Operation without vibration sensor

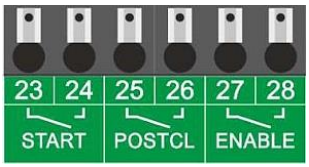

Continuous operation:

As long as the start input (START) is closed, the valves are controlled with the set control times. Requirement: the enable input (ENABLE) is closed.

Sequential operation (cycle sequence) with idle time:

Closing the input (POSTCL) starts the repeated activation of the valves with set control times.
The number of sequences is specified in the parameters. A closed enable input (ENABLE) is required.

Repeated activation:

Repeated activation of the outputs with adjustable idle time:
When the "POSTCL" terminal is closed, the control unit activates the outputs for the set number (0...9) of sequences with set working and pause times.

After the set sequences have been completed, an adjustable idle time (0...999 min) begins. The "idle time" LED lights up during the idle time. When the "POSTCL" terminal is opened, the control unit ends the working time/pause time of the current valve. When the "POSTCL" terminal is opened, the control unit ends the activation and goes into standby at the last activated valve output. When it is closed again, the process continues at the following valve output.

Example: 3 valves / 2 sequences

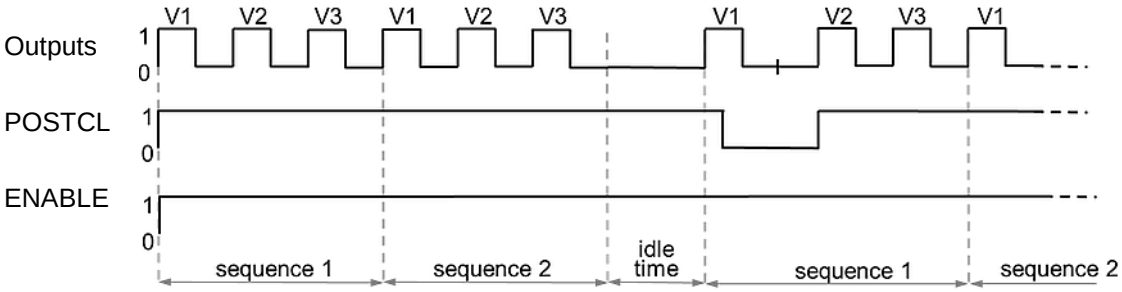

Permanent Activation:

When the "START" terminal is closed, the control unit activates the outputs with set duty times and pause times. When the "START" terminal is opened, the control unit ends the activation and goes into standby at the last activated valve output. When it is closed again, the process continues at the following valve output.

When the "POSTCL" terminal is opened, the control unit ends the duty time/pause time of the current valve. When the "POSTCL" terminal is opened, the control unit ends the activation and goes into standby at the last activated valve output. When it is closed again, the process continues at the following valve output.

Example: 3 valves / 2 sequences

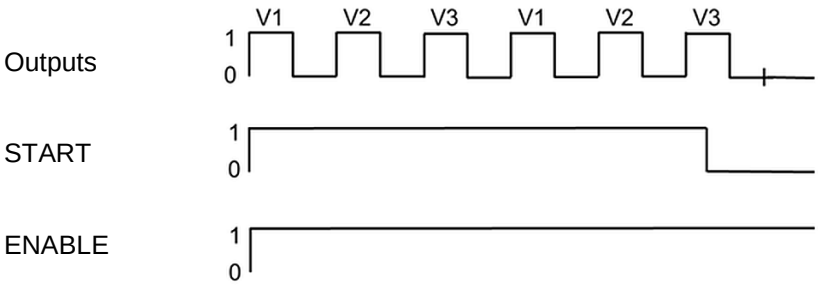

Operation with vibration sensor

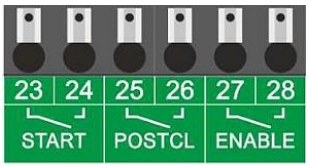

Permanent operation:

The vibration sensor is connected to the input (ENABLE). As long as the start input (START) is closed, the valves are actuated with the set control times.

Sequential operation (cycle sequence) with idle time:

Closing the input (POSTCL) starts the repeated activation of the valves with set control times.
The number of sequences is defined in the parameters.

Operation mode vibration monitoring:

Vibration monitoring can be set when using the optional ***Vibro****Monitor* series vibration monitoring system.

When vibration monitoring is activated, the controls expect potential-free opening of the contact “ENABLE”-release input during each duty time, e.g. from connected vibration sensors in series. The release mode is not available in this operation mode. Before ending the pause time at the pulsed output, the contact must be closed again. If the contact stays open, the controls signal the affected output number and the indicator of the vibration monitoring blinks. The LED “alarms active” light up and the relay “operation/error” change to error. This state is cancelled as soon as the contact ENABLE is closed in the next sequence or if the affected valve output is actuated manually.

Example: 3 valves

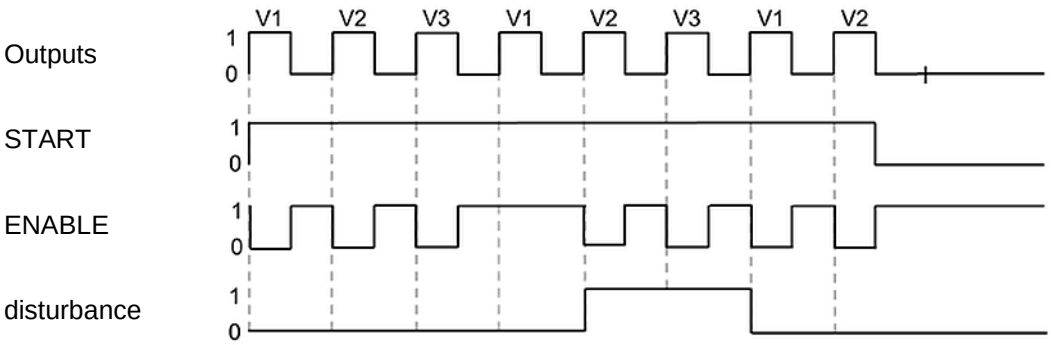

External status messages



Operation and error message relay:

In fault-free operation, the contact between terminals 20 and 22 is closed. The following causes lead to an error message:

1. Power failure (Fail-Safe-operation)
2. Bus error
3. Device error (parameter error)
4. Valve error
5. Vibration sensor error

Test function

Single valve test:

1.		Press the TEST key to test the function of a valve.
2.	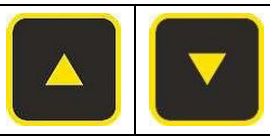	Use the UP/DOWN keys to select the desired valve.
3.		Press the ENTER key. The selected valve is permanently operated with the saved duty time and pause time. The active test mode is indicated by illuminated LEDs (permanent activation, duty time/pause time).
4.		End the test by pressing the PARA key or the TEST key twice.
5.		Test the next valve if necessary.

Sequence test:

1.		Press and hold the TEST key for 2 seconds to test the saved sequence (cycle).
2.		End the test by pressing the PARA key or the TEST key twice.

8 Maintenance and servicing



Observe the safety instructions in chap. Safety, starting on page 5.

Maintenance plan

Maintenance of the NAS must be carried out as follows:

Interval	Action
If required	Remove dust deposits from the housing of the NAS with a lint-free cloth.
Every 6 month	Check proper condition of connecting cables and plugs. When the NAS is exposed to constant weather influences: Check the seal in the cover and the electrical cables for porosity. Replace porous seal and leads.
At least every 4 years	Check proper condition of electrical systems and stationary electrical equipment.

9 Troubleshooting

Observe the safety instructions in chap. Safety, starting on page 5.

Expertise and regulations

Electrical faults may only be processed by a qualified electrician. Work on the NAS may only be carried out by authorised persons.

In the case of unauthorised intervention in the NAS there is no longer any warranty claim. Interventions of any kind are to be agreed upon with ***Netter****Vibration*.

Malfunctions and causes

In the case of malfunctions of the NAS proceed as follows:

Malfunction / display	Possible causes	Corrective action
NAS does not turn on	Phase interruption	Check fuse (for 24 V version) and connection cable and replace if necessary.
	Mains voltage too low.	Adjust mains voltage. Check cables and replace if necessary.
	Cable cores are connected with reversed polarity.	Connect cable cores with the correct polarity.
"buS" flashes in the display, the red alarm LED lights up	The sum of the valves set on the NAS is less than the total number of valves set.	1. Check the set total number of valves. 2. Check the number of valves set on the coding switch. 3. Check the wiring of the interface and the power supply (terminals 29 to 34 and + / - on the extensions).
The LED  flashes. The relevant valve is shown on the display	No current flows via the valve line.	1. Check the wiring to the displayed valve for an interruption. 2. Check the relevant valve. 3. Check the seat of the valve plug.
The LED  lights up	The permissible valve current of 1 A has been exceeded.	1. Check the wiring to the displayed valve for short circuits. 2. Check the relevant valve. 3. Check the seat of the valve plug.
Repeated activation does not work	No signal at the "Start sequence" input (POSTCL).	Check the input.

Malfunction / display	Possible causes	Corrective action
Display is dark or lights up for a short time and goes out again	The internal fuse blows. Note: After a recovery time of a few minutes the controls can be switched on again.	1. Switch off the control unit. 2. Check whether the permissible ambient temperatures are being adhered to 3. Check the duty time in relation to the pause time. 4. Check the current consumption of the solenoid valves. Observe the restrictions.
The display flashes and a "b" is shown in the first section 	The vibration monitor signals a malfunction at the displayed valve	1. Check the valve 2. Check the ***Vibro****Monitor*-sensor (optional). 3. Check if the pause time is set too short.
The red LED on the extension unit (optional) lights up	Incorrect setting of the coding switch for the device order	Check and correct the setting of the coding switch for the device order.

10 Disposal

Disposal



All parts of the NAS must be disposed of properly according to the material specifications. Do not dispose the electrical and electronic components of the NAS in the normal household waste, but in a special collection point for the environmentally friendly disposal of electrical equipment.
Observe the national regulations for disposal.

The NAS consist of electronic parts and components and a polycarbonate housing.

11 Annex

Circuit diagram (example)

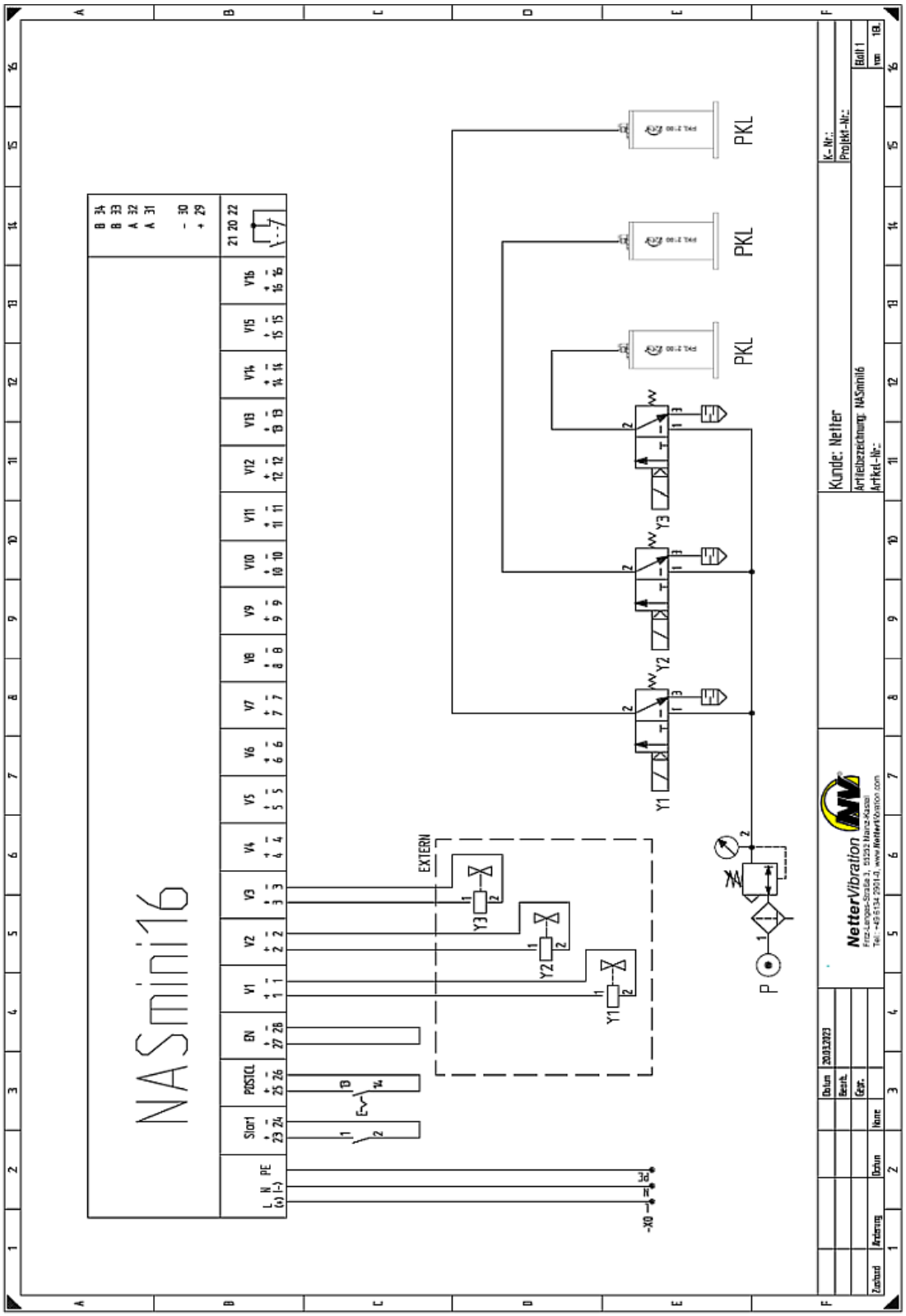

The declaration of conformity can be found at: www.***Netter****Vibration*.com